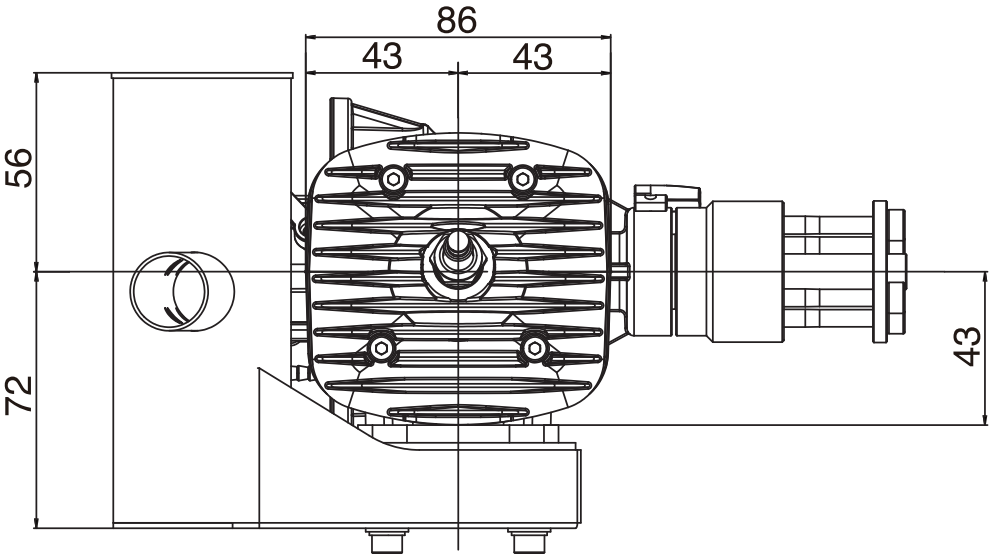
86
43
43
56
72
43

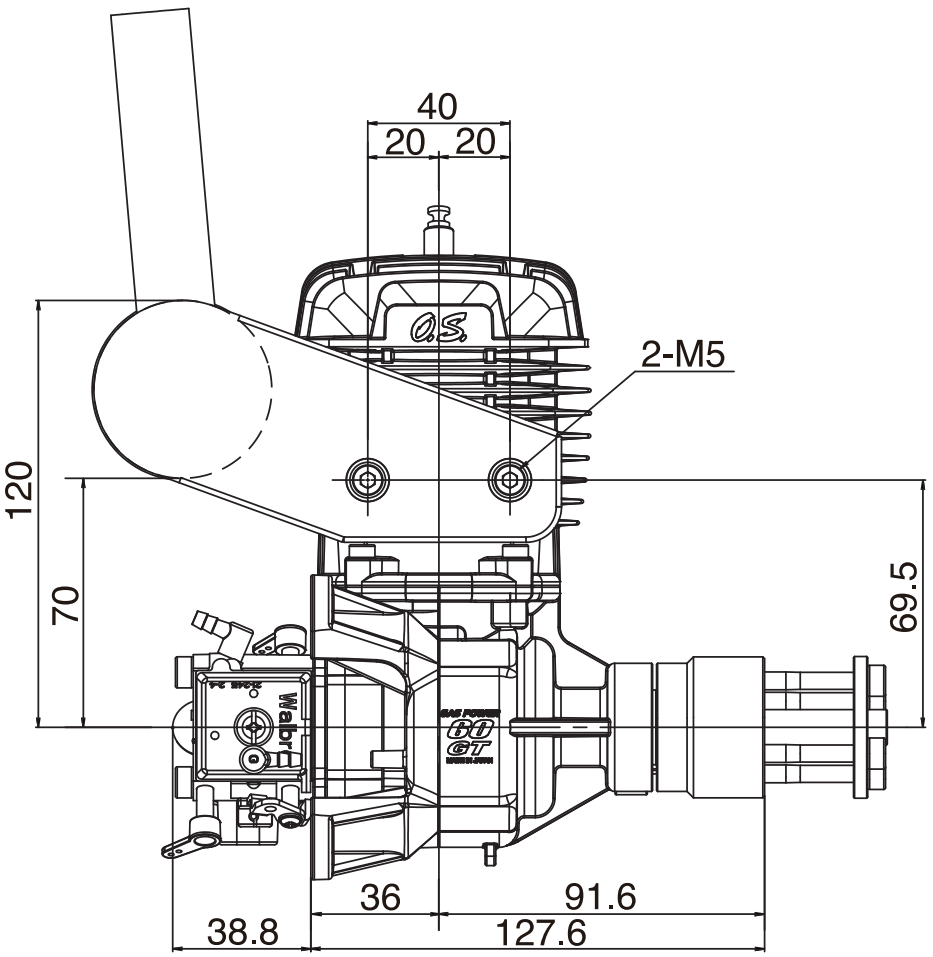
40
20
20
2-M5
120
70
69.5
36
91.6
38.8
127.6

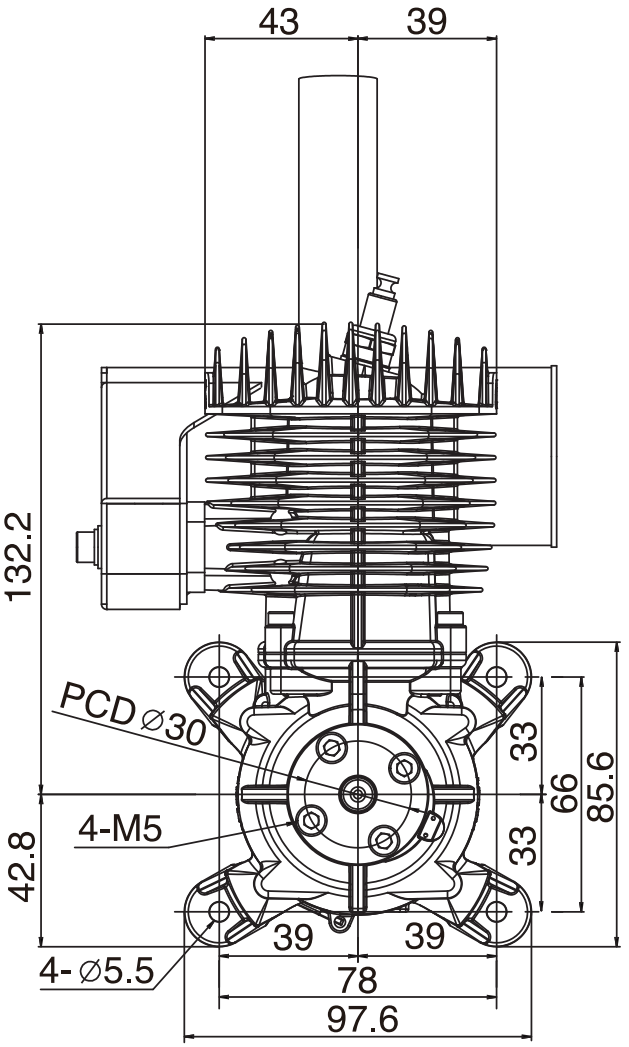
43
39
132.2
PCD ∅30
33
66
85.6
4-M5
42.8
33
39
39
4- ∅5.5
78
97.6