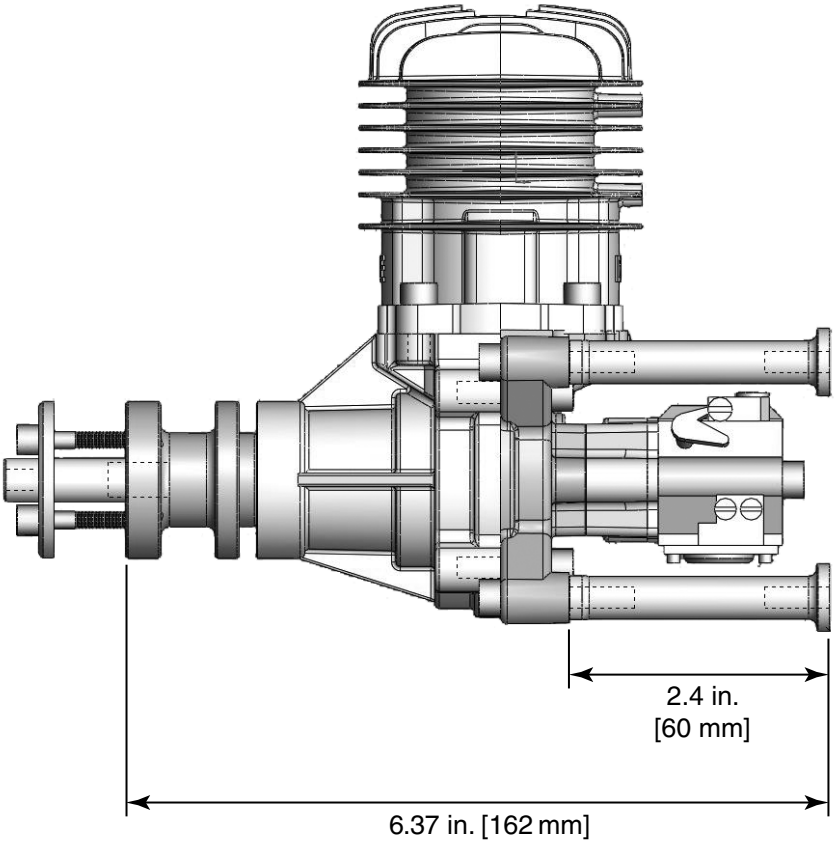
2.4 in.
[60 mm]
6.37 in. [162 mm]

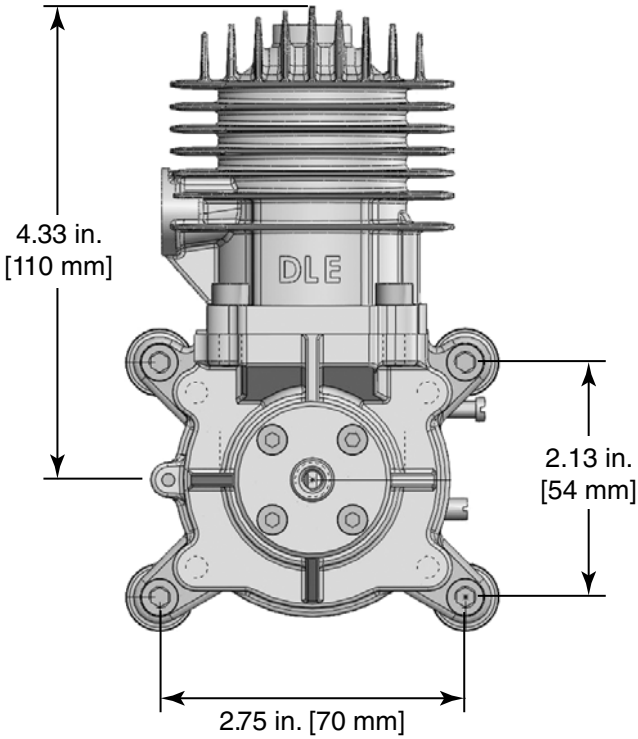
4.33 in.
[110 mm]
DLE
2.13 in.
[54 mm]
2.75 in. [70 mm]