For FS-26S

(45281010)

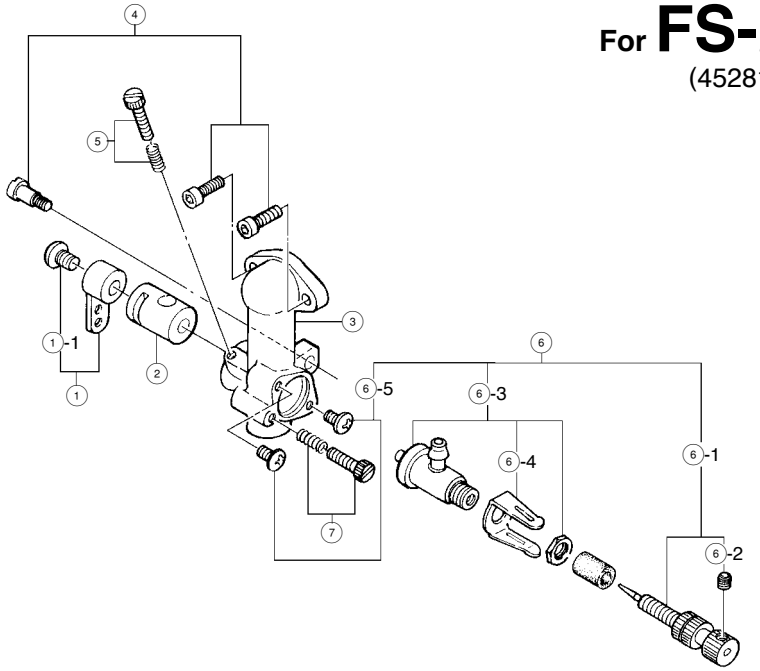

For FS-26S,FS-40M

No.	Code No.	Description
1	2 2081 408	Throttle Lever Assembly
1-1	2 2081 313	Throttle Lever Fixing Screw
2	4 5281 200	Carburettor Rotor
3	4 5281 100	Carburettor Body
4	4 5281 700	Carburettor Fixing Screw (3pcs.)
5	2 2081 811	Throttle Stop Screw
6	4 5281 910	Needle Valve Assembly
6-1	4 5781 970	Needle
6-2	2 6381 501	Set-screw
6-3	4 5283 960	Nozzle Assembly
6-4	2 3011 308	Ratchet Spring
6-5	4 5281 920	Nozzle Fixing Screw (2pcs.)
7	2 2081 820	Air-bleed Screw