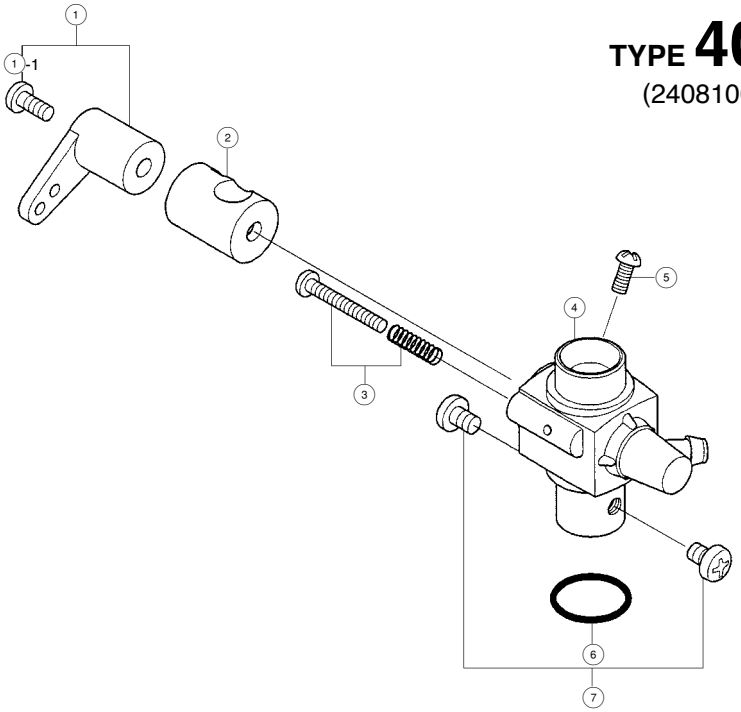

TYPE 40D

(24081000)

For 40LA,46LA

No.	Code No.	Description
1	2 1281 410	Throttle Lever Assembly
1-1	2 2081 313	Throttle Lever Fixing Screw
2	2 4081 200	Carburettor Rotor
3	2 4081 600	Air-Bleed Screw
4	2 4081 100	Carburettor Body
5	2 4081 300	Throttle Stop Screw
6	2 2615 000	Carburettor Gasket
7	2 3081 706	Carburettor Fixing Screw