TYPE 20G

(23881000)

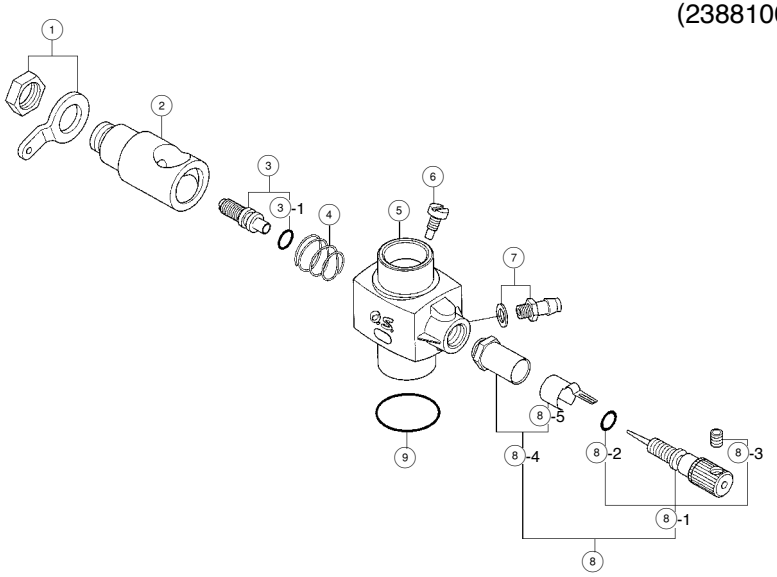

For 21RZ-M

No.	Code No.	Description
1	2 8281 400	Throttle Lever Assembly
2	2 3881 200	Carburettor Rotor
3	2 6781 309	Mixture Control Valve Assembly
3-1	2 4881 824	"O" Ring (2pcs.)
4	2 6781 506	Rotor Spring
5	2 3881 100	Carburettor Body
6	2 3881 220	Rotor Guide Screw
7	2 2681 953	Fuel Inlet
8	2 3881 900	Needle Valve Assembly
8-1	2 2681 980	Needle
8-2	2 4981 837	"O" Ring (2pcs.)
8-3	2 6381 501	Set Screw
8-4	2 7381 940	Needle Valve Holder Assembly
8-5	2 6711 305	Ratchet Spring
9	2 9015 019	Carburettor Gasket