TYPE 20F

(23482000)

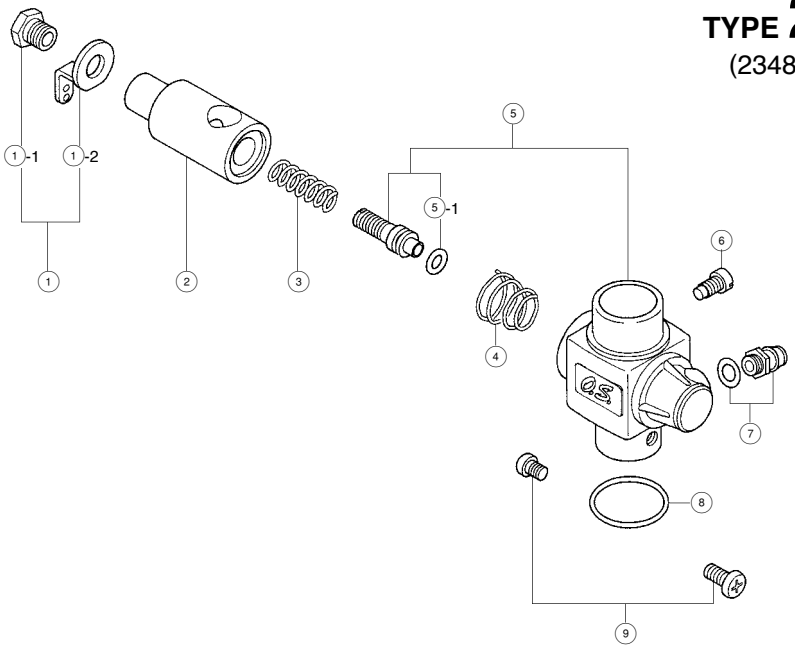

For 32SX

No.	Code No.	Description
1	2 2781 401	Throttle Lever Assembly
1-1	2 2781 420	Throttle Lever Fixing Nut
1-2	2 2781 411	Throttle Lever
2	2 3481 200	Carburettor Rotor
3	2 3481 650	Mixture Control Valve Spring
4	2 6781 506	Rotor Spring
5	2 3482 100	Carburettor Body
5-1	2 4881 824	"O" Ring (2pcs.)
6	4 5581 820	Rotor Guide Screw
7	2 2681 953	Fuel Inlet
8	2 2615 000	Carburettor Rubber Gasket
9	2 3081 706	Carburettor Fixing Screw