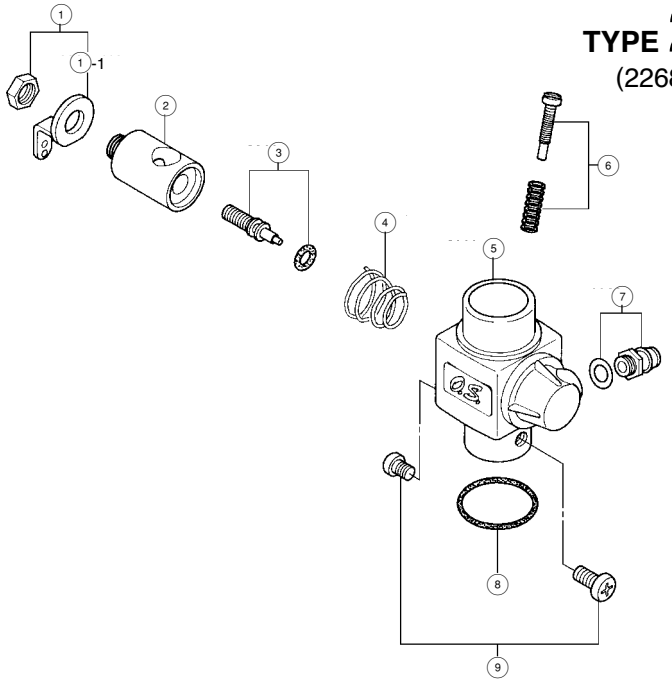


# TYPE 20D

(22681030)

For 25FX

| No. | Code No. | Description |
|---|---|---|
| 1 | 2 2681 430 | Throttle Lever Assembly |
| 1-1 | 2 2681 419 | Throttle Laver |
| 2 | 2 2681 220 | Carburettor Rotor |
| 3 | 2 2681 600 | Mixture Control Screw |
| 4 | 2 2481 506 | Rotor Spring (2pcs.) |
| 5 | 2 2681 140 | Carburettor Body |
| 6 | 2 2681 320 | Throttle Stop Screw |
| 7 | 2 2681 953 | Fuel Inlet |
| 8 | 2 2615 000 | Carburettor Rubber Gasket |
| 9 | 2 3081 706 | Carburettor Fixing Screw |
| | | |
| | | |
| | | |
| | | |
| | | |
| | | |
| | | |
| | | |
| | | |
| | | |
| | | |
| | | |